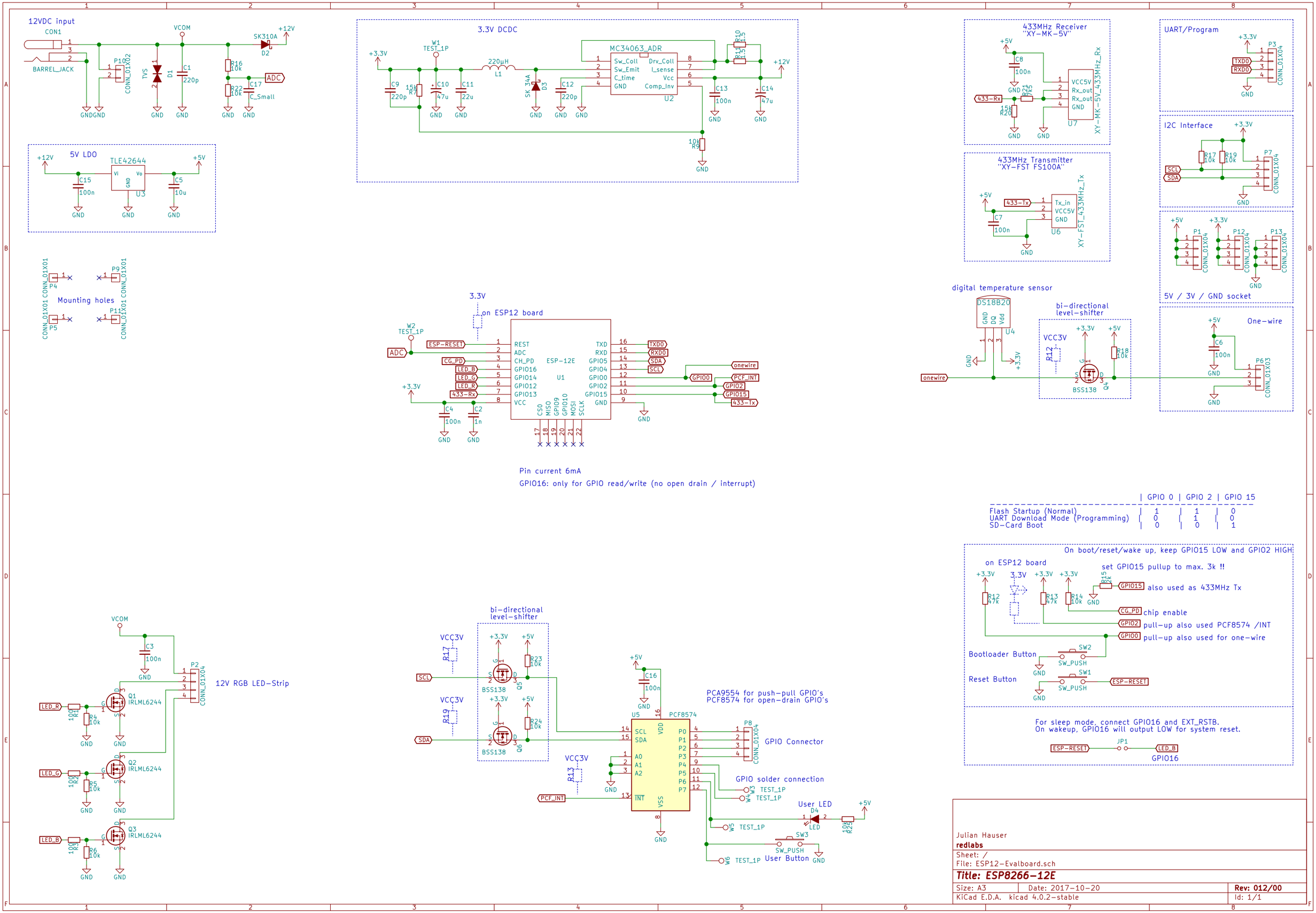

Julian Hauser
redlabs

Sheet: /
File: ESP12-Evalboard.sch

Title: ESP8266-12E

Size: A3	Date: 2017-10-20	**Rev: 012/00**
KiCad E.D.A. kicad 4.0.2-stable		Id: 1/1